robotize

The GoPal® AMR Solution

Complete end-to-end solution for automating your intralogistics using safe and collaborative **Autonomous Mobile Robots (AMRs)**

robotize.com

The GoPal® AMR Solution

The GoPal® AMR Solution covers a comprehensive range of Autonomous Mobile Robots (AMRs) and accessories – all managed by our GoControl Fleet Management System (FMS).

The GoPal® AMR solution is a fully CE-approved solution for automating internal material transportation in factories, warehouses and DCs. All GoPal® AMRs are approved for safe collaboration with humans and support a wide range of load carriers from Quick Movers, carts and trolleys to pallets weighing up to 1200 kg // 2640 lbs.

Typical deployments include

- Feeding tools and materials to production lines
- Transferring materials between lines/stations
- Delivering packaging materials to packaging lines
- Moving finished goods to strapping/wrapping or warehouse
- Removing waste

FAST ROI
The GoPal® AMR solution will typically begin saving you money within 6-18 months after deployment - depending on labor cost, number of shifts, operating hours etc.

CONTINUOUS OPERATION
The GoPal® AMRs operate as a single shift - 24/7/365. No more scheduling issues or calling replacements. Our AMRs never call-in sick or need a day off.

EXTREMELY AGILE
Due to their characteristic mechanical bumper, the GoPal® AMRs are extremely agile and able to operate and maneuver inside tight and confined spaces.

FAST & EFFICIENT
With a maximum speed of 2,4 m/s (7.9 ft/s), the GoPal® AMRs are some of the fastest and most efficient AMRs on the market.

SAFETY, SAFETY & SAFETY
Replace dangerous forklifts and manual transportation tasks with the GoPal® AMRs. Reassign employees for more important tasks and mitigate labour shortages.

ACTIONABLE DATA
The GoPal® AMR solution provides you with a steady stream of valuable data to enable you to continuously optimize your internal material flow.

REDUCE DAMAGES
On occasion, forklifts and pallet jacks may accidentally damage goods or parts of your infrastructure. With the GoPal® AMRs, you'll never have to worry about that.

EASILY CUSTOMIZED
Want a new feature in the GoControl FMS? No problem. Our talented software engineers can make your operational dreams come true.

GoPal® Pallet AMRs

GoPal® Platform AMRs

Small AMR

Big potential

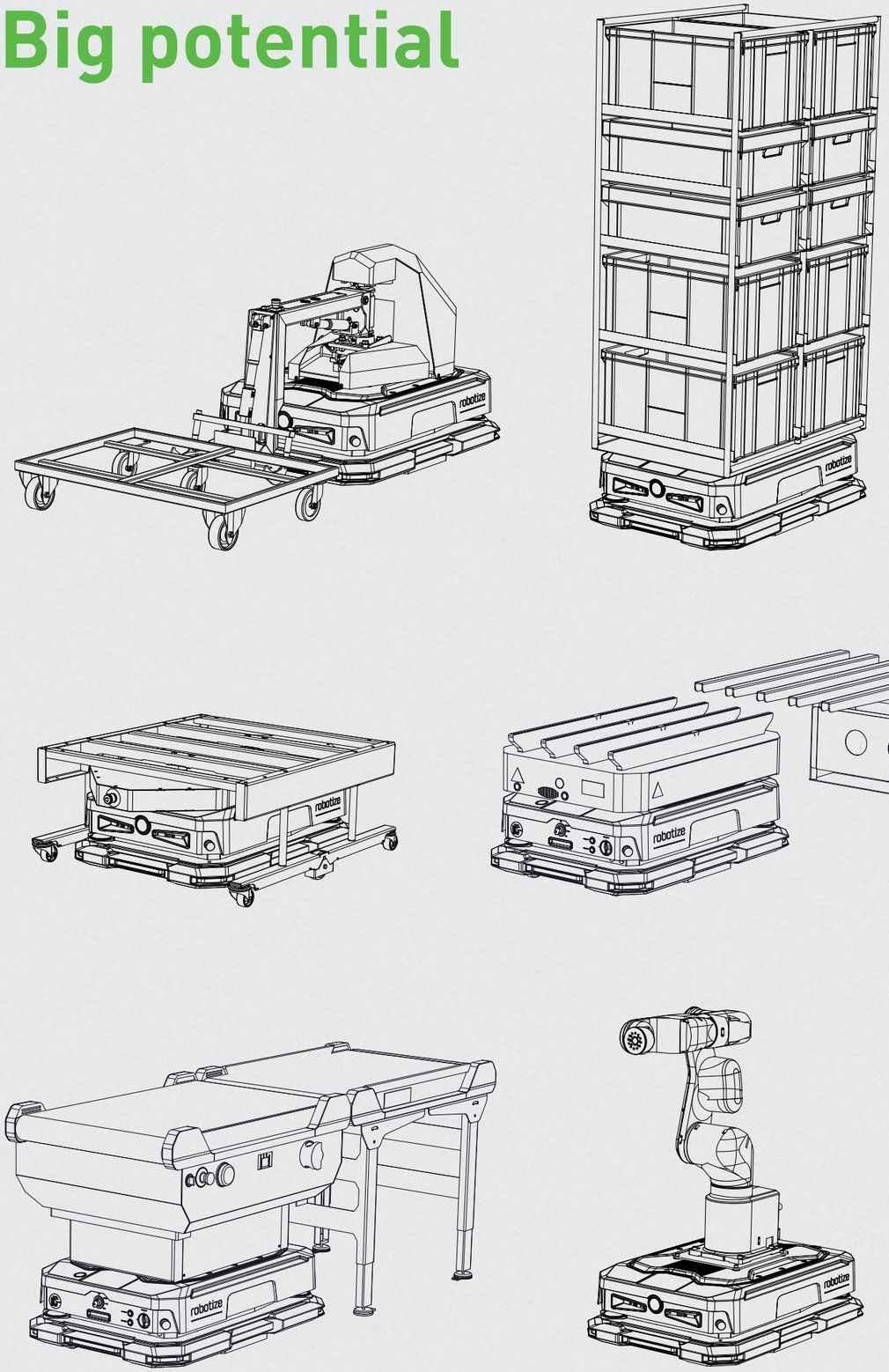

GoPal® P35

300 kg 660 lbs	500 kg 1100 lbs	1000 kg 2200 lbs	1200 kg 2640 lbs

The GoPal® P35 platform AMR is designed to transport loads on custom top modules or top modules from our partners.

Maximum load (incl. top module) is 300 kg // 660 lbs. Some top module configurations, however, support loads above 300 kg.

Mechanical interface Top plate with 4 x threaded holes (M8 x 9 mm // 0.35 in)

Electrical interfaces Power (24 V unreg. / 20 A fuse)
Safety signals (PL d)
Control signals (CAN/Ethernet)

SPEED (MAX.)
2,4 m/s // 7.9 ft/s

ROTATION DIAMETER
1300 mm // 3.3 ft

AUTONOMY
8-14 hours or up to 20 km // 12.5 mi

GoPal® E22

300 kg 660 lbs | 500 kg 1100 lbs | 1000 kg 2200 lbs | 1200 kg 2640 lbs

GoPal® E24

300 kg 660 lbs | 500 kg 1100 lbs | 1000 kg 2200 lbs | 1200 kg 2640 lbs

The GoPal® E22 and GoPal® E24 pallet AMRs are designed to transport loads on Euro-pallets and half Euro-pallets.

SPEED (MAX.)
2,4 m/s // 7.8 ft/s

ROTATION DIAMETER
1900 mm // 6.3 ft

AUTONOMY
6-14 hours or up to 20 km // 12.5 mi

GoPal® E24W

300 kg 660 lbs | 500 kg 1100 lbs | 1000 kg 2200 lbs | 1200 kg 2640 lbs

The GoPal® E24W (wide) pallet AMR is designed to transport loads on Euro-pallets, half Euro-pallets and Industrial pallets.

SPEED (MAX.)
2,2 m/s // 7.2 ft/s

ROTATION DIAMETER
2000 mm // 6.6 ft

AUTONOMY
6-14 hours or up to 20 km // 12.5 mi

GoPal® U22W

300 kg 660 lbs | 500 kg 1100 lbs | 1000 kg 2200 lbs | 1200 kg 2640 lbs

GoPal® U24W

300 kg 660 lbs | 500 kg 1100 lbs | 1000 kg 2200 lbs | 1200 kg 2640 lbs

The GoPal® U22W and GoPal® U24W pallet AMRs are designed to transport loads on UK/US-pallets.

SPEED (MAX.)
2,2 m/s // 7.2 ft/s

ROTATION DIAMETER
2000 mm // 6.6 ft

AUTONOMY
6-14 hours or up to 20 km // 12.5 mi

All GoPal® AMRs have three priorities

Safety, safety and safety

- Truck Light (green light on the floor in front of the robot)
- Laser scanners (360° protection)
- 3D-cameras
- Mechanical bumper (360° protection)
- Emergency stop buttons
- Aural warnings (sounds with optional voice)
- Visual warnings (integrated lights on all sides)
- Warning beacon (optional)

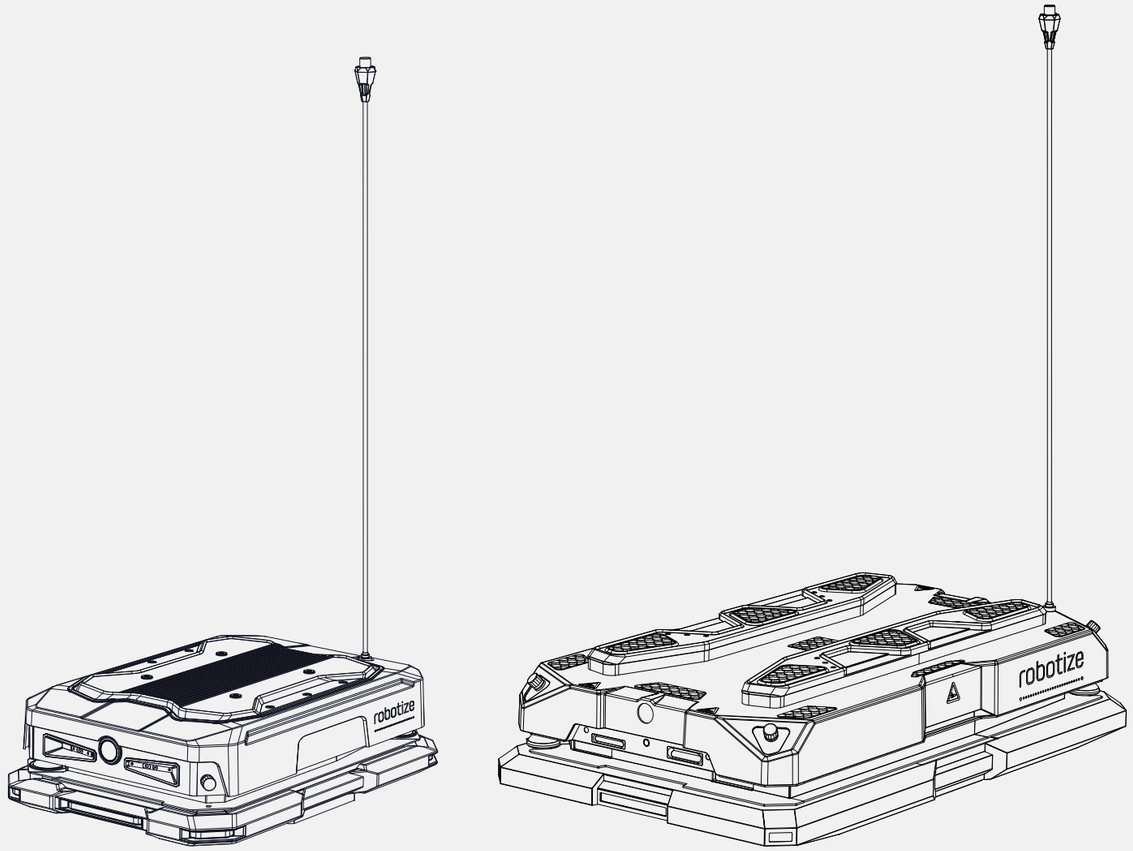

GoPal® AMRs are CE-marked and comply with applicable directives and standards (incl. ISO 3691-4) and designed according to ANSI-B56.5.

GoPal®

Autonomous Mobile Robots

		P35	E22	E24	E24W	U22W	U24W
AMR TYPE		Platform AMR	Pallet AMR	Pallet AMR	Pallet AMR	Pallet AMR	Pallet AMR
TRANSPORTATION TYPE		Point-to-point/ Station-to-station	Station-to-station	Station-to-station	Station-to-station	Station-to-station	Station-to-station
PHYSICAL CHARACTERISTICS	**AMR Dimensions (LxWxH)**	960 x 660 x 295 mm // 37.8 x 26 x 11.6 in	1400 x 860 x 340 mm // 55.1 x 33.9 x 13.4 in	1400 x 860 x 340 mm // 55.1 x 33.9 x 13.4 in	1400 x 1060 x 340 mm // 55.1 x 41.7 x 13.4 in	1400 x 1060 x 340 mm // 55.1 x 41.7 x 13.4 in	1400 x 1060 x 340 mm // 55.1 x 41.7 x 13.4 in
	AMR Weight	120 kg // 265 lbs	187 kg // 413 lbs	187 kg // 413 lbs	215 kg // 474 lbs	242 kg // 534 lbs	242 kg // 534 lbs
PERFORMANCE	**Autonomy (battery time)**	8-14 hours or up to 20 km // 12.5 mi	6-14 hours or up to 20 km // 12.5 mi	6-14 hours or up to 20 km // 12.5 mi	6-14 hours or up to 20 km // 12.5 mi	6-14 hours or up to 20 km // 12.5 mi	6-14 hours or up to 20 km // 12.5 mi
	Speed (max.)	2,4 m/s // 7.9 ft/s	2,4 m/s // 7.9 ft/s	2,4 m/s // 7.9 ft/s	2,2 m/s // 7.2 ft/s	2,2 m/s // 7.2 ft/s	2,2 m/s // 7.2 ft/s
	Rotation diameter (min.)	1300 mm // 3.3 ft[1]	1900 mm // 6.3 ft	1900 mm // 6.3 ft	2000 mm // 6.6 ft	2000 mm // 6.6 ft	2000 mm // 6.6 ft
	Drive type	Differential drive	Differential drive	Differential drive	Differential drive	Differential drive	Differential drive
NAVIGATION	**Free (autonomous)**	●	●	●	●	●	●
	Support for hybrid localization	●	●	●	●	●	●
LOAD	**Maximum**	**300 kg // 660 lbs[2]**	**500 kg // 1100 lbs**	**1000 kg // 2200 lbs**	**1200 kg // 2640 lbs**	**500 kg // 1100 lbs**	**1200 kg // 2640 lbs**
	Dimensions (max.) (LxWxH)	Depends on top module/ load carrier	1240 x 820 x 2400 mm // 48.8 x 32.2 x 94.5 in	1240 x 820 x 2400 mm // 48.8 x 32.2 x 94.5 in	1240 x 1020 x 2400 mm // 48.8 x 40.1 x 94.5 in	1240 x 1020 x 2400 mm // 48.8 x 40.1 x 94.5 in	1240 x 1020 x 2400 mm // 48.8 x 40.1 x 94.5 in
LOAD CARRIER TYPES	**Standard Euro Pallets**		●	●	●	-	-
	Standard Half-Euro Pallets		●	●	●	-	-
	Industrial Euro Pallets		-	-	●	-	-
	UK/US Pallets		-	-	-	●	●
	Top Modules	●	-	-	-	-	-
FLOOR REQUIREMENTS	**Gradient (max.)[3]**	±2%	±2%	±2%	±2%	±2%	±2%
	Edge Height (max.)	2 mm // 0.08 in	4 mm // 0.15 in	4 mm // 0.15 in	3 mm // 0.12 in	3 mm // 0.12 in	3 mm // 0.12 in
	Friction Coefficient (min.)	0.7	0.6	0.6	0.6	0.6	0.6
SAFETY & COLLISION AVOIDANCE	**Laser Scanners (360* protection)**	2	2	2	2	2	2
	3D Cameras (front/rear)	2/1	2/1	2/1	2/1	2/1	2/1
	Emergency Stop Buttons	2	4	4	4	4	4
	Mechanical Bumper (360* protection)	●	●	●	●	●	●
	Truck Light	●	●	●	●	●	●
	Aural Warnings (sound and voice[4])	●	●	●	●	●	●
	Visual Warnings (integrated lights)	6	6	6	6	6	6
	Warning Beacon	Option	Option	Option	Option	Option	Option
BATTERY & CHARGING	**Battery Type/Voltage**	$LiFePO_4$ / 24 V	$LiFePO_4$ / 48 V	$LiFePO_4$ / 48 V	$LiFePO_4$ / 48 V	$LiFePO_4$ / 48 V	$LiFePO_4$ / 48 V
	Charge Time (30 -> 95%)	55 mins.	45 mins.	45 mins.	45 mins.	45 mins.	45 mins.
	Number of Charge Cycles	About 5000	About 5000	About 5000	About 5000	About 5000	About 5000
	Primary Charging	Wireless (inductive)	Physical docking interface	Physical docking interface	Physical docking interface	Physical docking interface	Physical docking interface
	Emergency Charging	USB-C	Connector (FT80)	Connector (FT80)	Connector (FT80)	Connector (FT80)	Connector (FT80)
ENVIRONMENTAL	**Operating Temperature**	-10 to +45 °C // +14 to +113 °F	-10 to +45 °C // +14 to +113 °F	-10 to +45 °C // +14 to +113 °F	-10 to +45 °C // +14 to +113 °F	-10 to +45 °C // +14 to +113 °F	-10 to +45 °C // +14 to +113 °F
	Humidity (max.)	95% (non-condensing)	95% (non-condensing)	95% (non-condensing)	95% (non-condensing)	95% (non-condensing)	95% (non-condensing)
COMMUNICATION	**Wi-Fi**	802.11ac	802.11ac	802.11ac	802.11ac	802.11ac	802.11ac

1 *GoPal P35 AMR only (i.e., without top module).*
2 *Some top module configurations support loads above 300 kg // 660 lbs.*
3 *Under certain conditions, the GoPal AMRs may operate on steeper ramps. Please contact Robotize for more information.*
4 *Voice is optional. Various language packs available.*

robotize

GoPal® Accessories

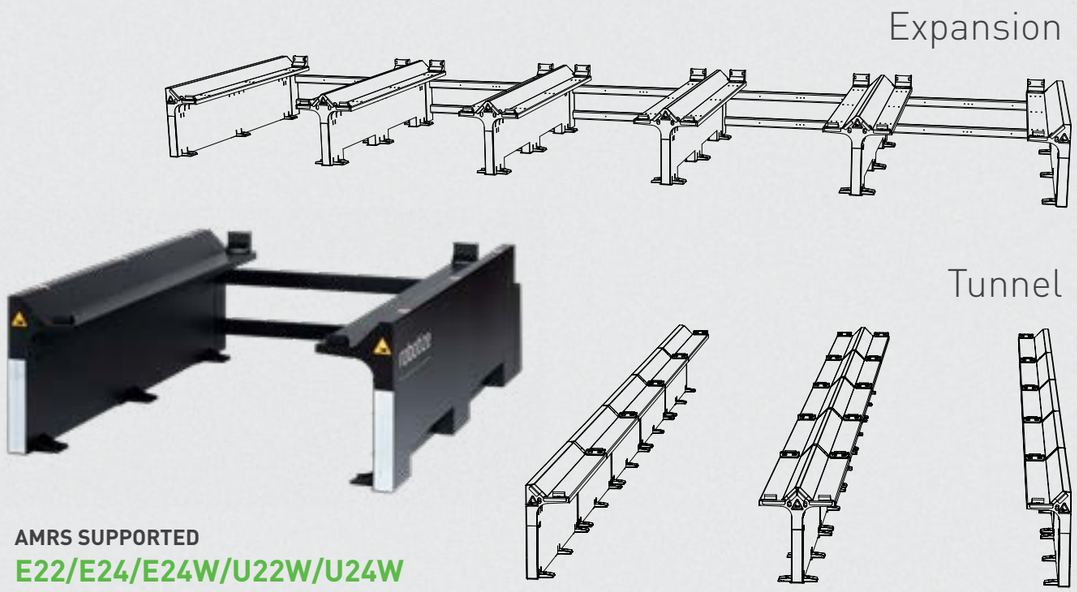

Charging Station (E/EUW)

AMRS SUPPORTED
E22/E24/E24W/U22W/U24W

CHARGER INTERFACE
Physical connectors

Charging Station (PL)

AMRS SUPPORTED
P35

CHARGER INTERFACE
Wireless (inductive)

Pallet Stations

Pallet Stations are used as pick-up, transit and delivery points for the GoPal® pallet AMRs.

Pallet Stations can be expanded into rows with a smaller combined footprint or into columns for Tunnel (Deep Lane) operations.

Optional equipment includes Pallet Sensors to detect the presence/absence of a pallet.

Charging Stations

The **GoControl** Fleet Management System automatically manages battery conditions and directs the GoPal® AMRs to their charging stations when required.

GoPal® Accessories

Lift Stations

Interface between the GoPal® AMR Solution and manual pallet jacks.

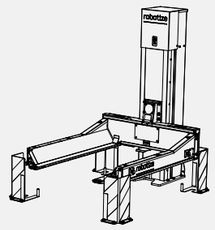

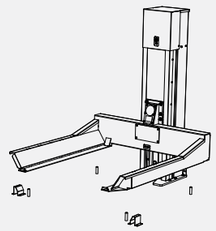

Lift Station (EUW)

AMRS SUPPORTED
E22/E24/E24W/U22W/U24W

Lift Station (UW)

AMRS SUPPORTED
U22W/U24W

		Lift Station (EUW)	Lift Station (UW)
LIFT TYPE		Column Lift	Column Lift
PHYSICAL CHARACTERISTICS	Dimensions (LxWxH)	1775 x 1296-1496 x 1678 mm // 70 x 51-59 x 66 in	1762 x 1307 x 1678 mm // 69.3 x 51.5 x 66.1 in
	Weight	360 kg // 794 lbs	325 kg // 740 lbs
LOAD	Maximum	**1200 kg // 2640 lbs**	**1200 kg // 2640 lbs**
LOAD CARRIERS SUPPORTED	Std. Euro Pallets	●	-
	Std. Half-Euro Pallets	-	-
	Industrial Euro Pallets	●	●
	UK/US Pallets	●	●
PERFORMANCE	Pallet transaction height[1]	80 mm // 3.1 in	5 mm // 0.2 in
SAFETY	Emergency Stop Buttons	5	1
	Aural Warnings	●	●
	Visual Warnings	●	●
	Safety System	Integrated	External safety system required
CONTROL MODES	Automatic	●	●
	Manual	●	●
SENSORS	Pallet Presence/Absence	Option	Option
INTERFACES	External Safety System	N/A	1
	General Purpose I/O	1	1
	Maintenance Port	USB-A	USB-A
COMMUNICATION	Wi-Fi	802.11ac	802.11ac
	LAN	●	●
POWER	Input	110-240 VAC / 50-60 Hz	110-240 VAC / 50-60 Hz

1 *As measured from the floor surface to the bottom of the pallet, when the Lift Station is in "full down" mode.*

GoPal® Accessories

Conveyor Stations

Interface between the GoPal® AMR Solution and conveyor systems.

Conveyor Station (E)

AMRS SUPPORTED
E22/E24

Conveyor Station (UW)

AMRS SUPPORTED
U22W/U24W

Conveyor Station (EW)

AMRS SUPPORTED
E22/E24/E24W

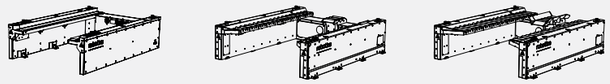

		Conveyor Station (E)	Conveyor Station (UW)	Conveyor Station (EW)
CONVEYOR TYPE		Belt	Rollers	Rollers
PHYSICAL CHARACTERISTICS	Dimensions (LxWxH)	1620 x 1050 x 395 mm // 63.8 x 41.4 x 15.6 in	1622 x 1316 x 419 mm // 63.9 x 51.8 x 16.5 in	1622 x 1316 x 419 mm // 63.9 x 51.8 x 16.5 in
	Weight	140 kg // 309 lbs	365 kg // 805 lbs	365 kg // 805 lbs
LOAD	Maximum	**750 kg // 1653 lbs**	**1500 kg // 3306 lbs**	**1500 kg // 3306 lbs**
LOAD CARRIERS SUPPORTED	Std. Euro Pallets	●	-	●
	Std. Half-Euro Pallets	●	-	●
	Industrial Euro Pallets	-	-	●
	UK/US Pallets	-	●	-
PERFORMANCE	Pallet transaction height[1]	359 mm // 14.13 in	355 mm // 13.98 in	355 mm // 13.98 in
SAFETY	Emergency Stop Buttons	4	4	4
	Auto-stop[2]	●	●	●
	Aural Warnings	●	●	●
	Visual Warnings	●	●	●
CONTROL MODES	Automatic	●	●	●
	Manual	-	-	-
SENSORS	Pallet Presence/Absence	1	1	1
	Safety (Auto-stop)	1	1	1
INTERFACES	PLC	●	●	●
	General Purpose I/O	1	1	1
	Maintenance port	USB-A	USB-A	USB-A
COMMUNICATION	Wi-Fi	802.11ac	802.11ac	802.11ac
	LAN	●	●	●
POWER	Input	110-240 VAC / 50-60 Hz	110-240 VAC / 50-60 Hz	110-240 VAC / 50-60 Hz

1 *As measured from the floor surface to the bottom of the pallet, when placed on the Conveyor Station.*
2 *Automatic safety stop if pallet moves beyond Conveyor Station entrance/exit.*

GoControl Fleet Management System

GoControl FMS manages all AMRs, accessories and orders.

SIMPLE & INTUITIVE

GoControl provides a simple and intuitive web interface and presents data, such as AMR position on a map in real-time, distance driven, pallets moved and much, much more.

AUTOMATIC DISPATCH

GoControl receives and prioritizes incoming orders and automatically dispatches AMRs accordingly.

TRAFFIC CONTROL

GoControl constantly monitors AMR movement ensuring optimal traffic flow for maximum safety and efficiency.

CHARGING

GoControl manages the power requirements of the AMRs and will automatically direct the robots to a charging station when required. GoControl also ensures that all AMRs are kept in a proper charging state enabling the robots to complete tasks, while also taking battery health into account.

INTEGRATION

GoControl integrates to your WMS/ERP to automatically receive and process orders.

COMMUNICATION

The IO Box enables communication between GoControl and:

- accessories, such as Pallet Sensors and Control Interfaces
- external systems, such as systems for automatically opening doors/gates, automatically deactivating AMRs in case of emergency or communicating with local machines, production cells, PLCs etc.

IO BOX

Each IO Box provides six Inputs/Outputs.

CONTROL INTERFACES

Control Interfaces enable employees to manually create orders. Simply click a button to have an AMR arrive to pick up a pallet, cart or trolley and proceed to deliver it to one (or more) predefined delivery points.

PHYSICAL BUTTONS

Single Button or Multi Button.

VIRTUAL BUTTONS

Create as many Virtual Buttons as you want in a browser.

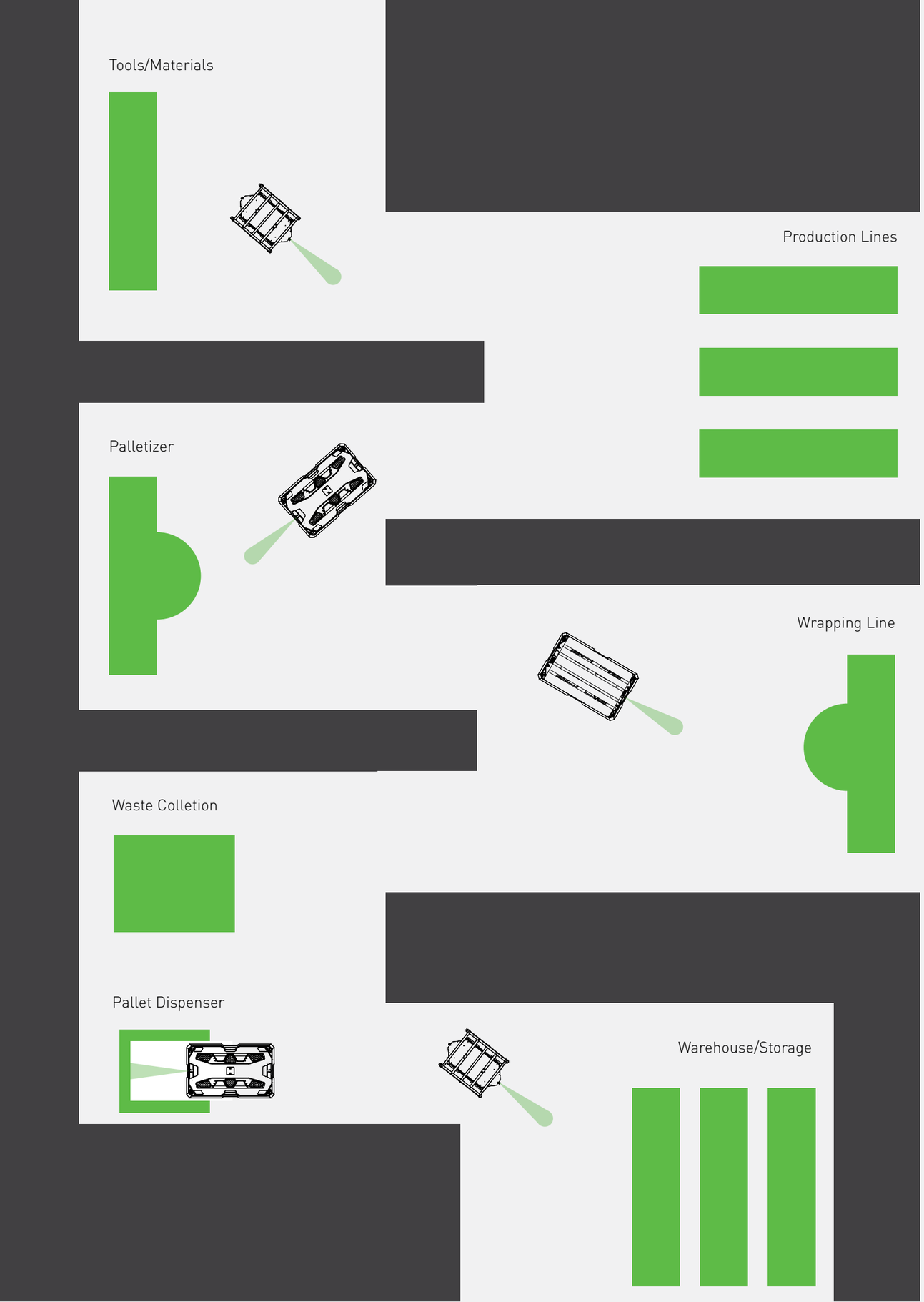

Solving Your Challenges

The reason we call it the GoPal® "Solution"

Feed tools and materials to production lines

GoPal® AMRs keep production lines running smoothly by delivering the right tools and materials exactly when and where they are needed. Automate line feeding to reduce downtime, eliminate manual handling, and ensure a consistent flow of components, helping operators focus on value-adding tasks while boosting productivity.

Transfer materials between lines and stations

Have GoPal® AMRs transfer materials between lines and stations to make your intralogistics safer, faster, and more predictable. The AMRs move materials autonomously and reliably, reducing congestion and delays while improving line balance and enabling a more flexible, responsive production layout.

Deliver packaging materials to packaging lines

GoPal® AMRs ensure that packaging lines are never starved of materials by autonomously delivering packaging supplies. This minimizes line stoppages, optimizes inventory levels at the line side, and allows packaging operators to concentrate on quality and throughput rather than material replenishment.

Move finished goods to strapping/wrapping or warehouse

By automating the transport of finished goods, GoPal® AMRs create a seamless flow from production to strapping, wrapping, or warehouse storage. This reduces manual transport, improves traceability, and speeds up order fulfillment, all while maintaining a safe working environment and scalable operations.

Remove Waste

GoPal® AMRs streamline waste removal by collecting scrap and waste materials from production areas and transporting it to the waste collection area. This keeps workstations clean and efficient, reduces unnecessary operator movement, and supports a safer, more organized factory floor with minimal disruption to operations.

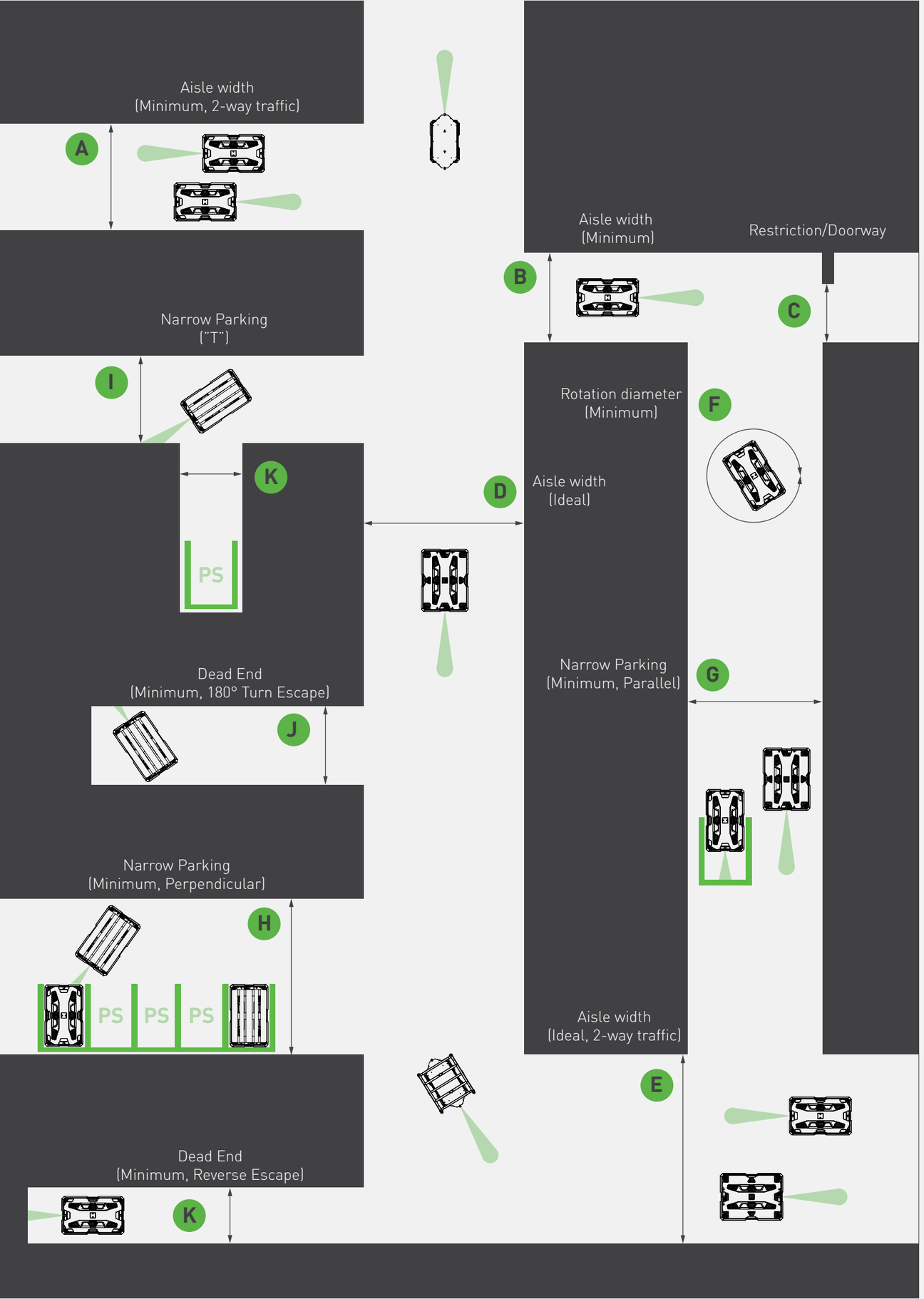

Moving Materials

Safely, efficiently and automatically. After all, that's what it's all about.

		P35[1]	E22/E24	E24W/U22W/U24W
Aisle width (Minimum, 2-way traffic)	**A**	2090 mm // 6.86 ft	2500 mm // 8.20 ft	2900 mm // 9.52 ft
Aisle Width (Minimum)	**B**	1000 mm // 3.28 ft	1200 mm // 3.94 ft	1400 mm // 4.60 ft
Restriction/Doorway	**C**	900 mm // 2.96 ft	1100 mm // 3.61 ft	1300 mm // 4.27 ft
Aisle Width (Ideal)	**D**	> 2000 mm // > 6.57 ft	> 2100 mm > 6.89 ft	> 2300 mm // > 7.55 ft
Aisle Width (Ideal, 2-way traffic)	**E**	> 4000 mm // > 13.13 ft	> 4200 mm > 13.78 ft	> 4600 mm // > 15.10 ft
Rotation diameter (Minimum)	**F**	1300 mm // 4.27 ft	1900 mm // 6.24 ft	2000 mm // 6.57 ft
Narrow Parking (Minimum, Parallel)	**G**	2100 mm // 6.89 ft	2600 mm // 8.53 ft	2950 mm // 9.68 ft
Narrow Parking (Minimum, Perpendicular)	**H**	2600 mm // 8.53 ft	3225 mm // 10.58 ft	3325 mm 10.91 ft
Narrow Parking ("T")	**I**	1300 mm // 4.27 ft	1600 mm // 5.25 ft	1620 mm // 5.32 ft
Dead End (Minimum, 180° Turn Escape)	**J**	1300 mm // 4.27 ft	1900 mm // 6.24 ft	2000 mm // 6.57 ft
Dead End (Minimum, Reverse Escape)	**K**	1000 mm // 3.28 ft	1200 mm // 3.94 ft	1400 mm // 4.60 ft

1 *GoPal P35 AMR only (i.e., without top module).*

The GoPal® AMR Solution

CLAAS Clovin® KÄRCHER MARQUARDT PLUS PACK SCHAEFFLER

ADVANCED INTRALOGISTICS - SIMPLE, SAFE AND SCALABLE

Robotize specializes in the design and manufacture of safe and advanced collaborative Autonomous Mobile Robots (AMRs) for internal material transportation in factories, warehouses and DCs.

EMEA & Asia

Robotize HQ
Maglebjergvej 5B
2800 Kgs. Lyngby
Denmark
+45 3080 9070

Americas

Robotize Inc.
1904 Woodslee Drive
Troy, MI 48083
USA
+ 1 (248) 506-3959

robotize

robotize.com